Current part is item (7) on diagram. Available at www.oshkoshequipment.com

(1) SMR Code	(2) Federal Stock Number	(3) DESCRIPTION Reference Number & Mfr. Code	Usable On Code	(4) UNIT of meas	(5) QTY inc. in Unit	(6) 30-day Organ maint allowance (a) 1-20	(b) 21-50	(c) 51-100	(7) 30-day Ds maint allowance (a) 1-20	(b) 21-50	(c) 51-100	(8) Ds-Ir alw per 100 equip cnt-gcy	(9) Depot maint alw per 100 equip	(10) Illustration (a) Figure No.	(b) Item No.
		1812-SPECIAL PURPOSE BODIES-CONTINUED													
		NON-ILLUSTRATED-CONTINUED													
P-F	5930-679-15	SWITCH,PUSH:SOLID SIDE 8342288 (19207)	CE,CF,CG	EA	2	*	*	*	*	*	*	6	8		
P-O	5975-335-25	TUBE,FLEXIBLE,NONMETALLIC: 8376125 (19207)	CE,CF,CG	FT	V	*	*	*	*	*	*	3	5		
		GROUP 20-HOIST,WINCH AND POWER CONTROL AND POWER TAKE-OFF													
		2001-HOIST,WINCH,CRANE ASSEMBLY													
P-O-R	2590-741-11	WINCH ASSEMBLY:FRONT 7411122 (19207)	HA,JA,FJ	EA	1	*	*	*	*	*	*	6	10	208	1
P-F	2590-121-07	SHEAVE ASSEMBLY,WINCH: 7954483 (19207)		EA	1	*	*	*	*	*	*	4	5	208	2
P-F	5305-054-92	SCREW,CAP,HEXAGON HEAD: TRACK ASSEMBLY MS51955-77 (96906)		EA	2	*	*	*	*	*	*	6	10	208	3
P-F	5310-834-87	NUT,PLAIN:TRACK ASSEMBLY MS356919-33 (96906)		EA	4	*	*	*	*	*	*	6	10	208	4
P-F	5305-044-55	SCREW,CAP,HEXAGON HEAD: MS90725-160 (96906)		EA	1	*	*	*	*	*	*	6	10	208	5
P-F	5310-820-66	WASHER,LOCK:TRACK ASSEMBLY MS35338-50 (96906)		EA	1	*	*	*	*	*	*	6	10	208	6
X1		TRACK ASSEMBLY: 8344234 (19207)			1									208	7
P-O	2590-641-64	WINCH,ASSEMBLY:WITH ROLLER 7412382 (19207)	HA,JA,FJ	EA	1	*	*	*	*	*	*	6	10	208	8
P-F	2590-118-55	DRUM ASSEMBLY,WINCH: 7954477 (19207)		EA	1	*	*	*	*	*	*	4	5	208	9
P-F	5305-051-08	SCREW,CAP,HEXAGON HEAD: ROLLER ASSEMBLY MS90725-164 (96906)		EA	4	*	*	*	*	*	*	6	10	208	10
P-F	5310-820-66	WASHER,LOCK:ROLLER ASSEMBLY MS35338-51 (96906)		EA	4	*	*	*	*	*	*	6	10	208	11
P-F	5310-584-78	WASHER,LOCK:ROLLER ASSEMBLY MS35338-51 (96906)		EA	12	*	*	*	*	*	*	6	10	208	12
P-F	5310-584-78	WASHER,LOCK:ROLLER ASSEMBLY MS35338-51 (96906)		EA	12	*	*	*	*	*	*	6	10	208	12
P-F	5305-939-92	SCREW,CAP,HEXAGON HEAD: ROLLER ASSEMBLY MS90725-187 (96906)		EA	12	*	*	*	*	*	*	6	10	208	13

Current part is item (7) on diagram. Available at www.oshkoshequipment.com

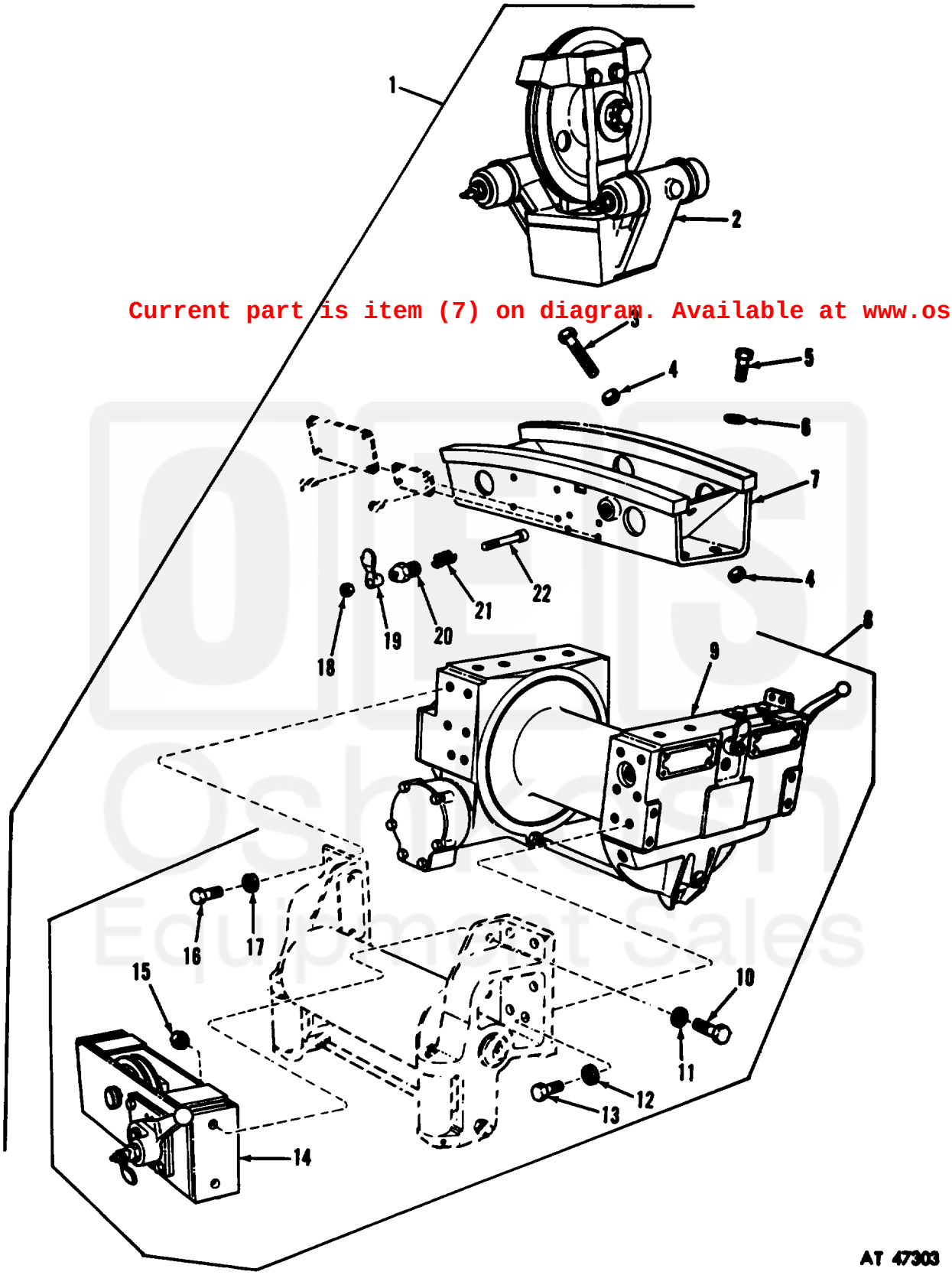

Current part is item (7) on diagram. Available at www.oshkoshequipm

Figure 208. Front winch assembly.

Current part is item (7) on diagram. Available at www.oshkoshequipm